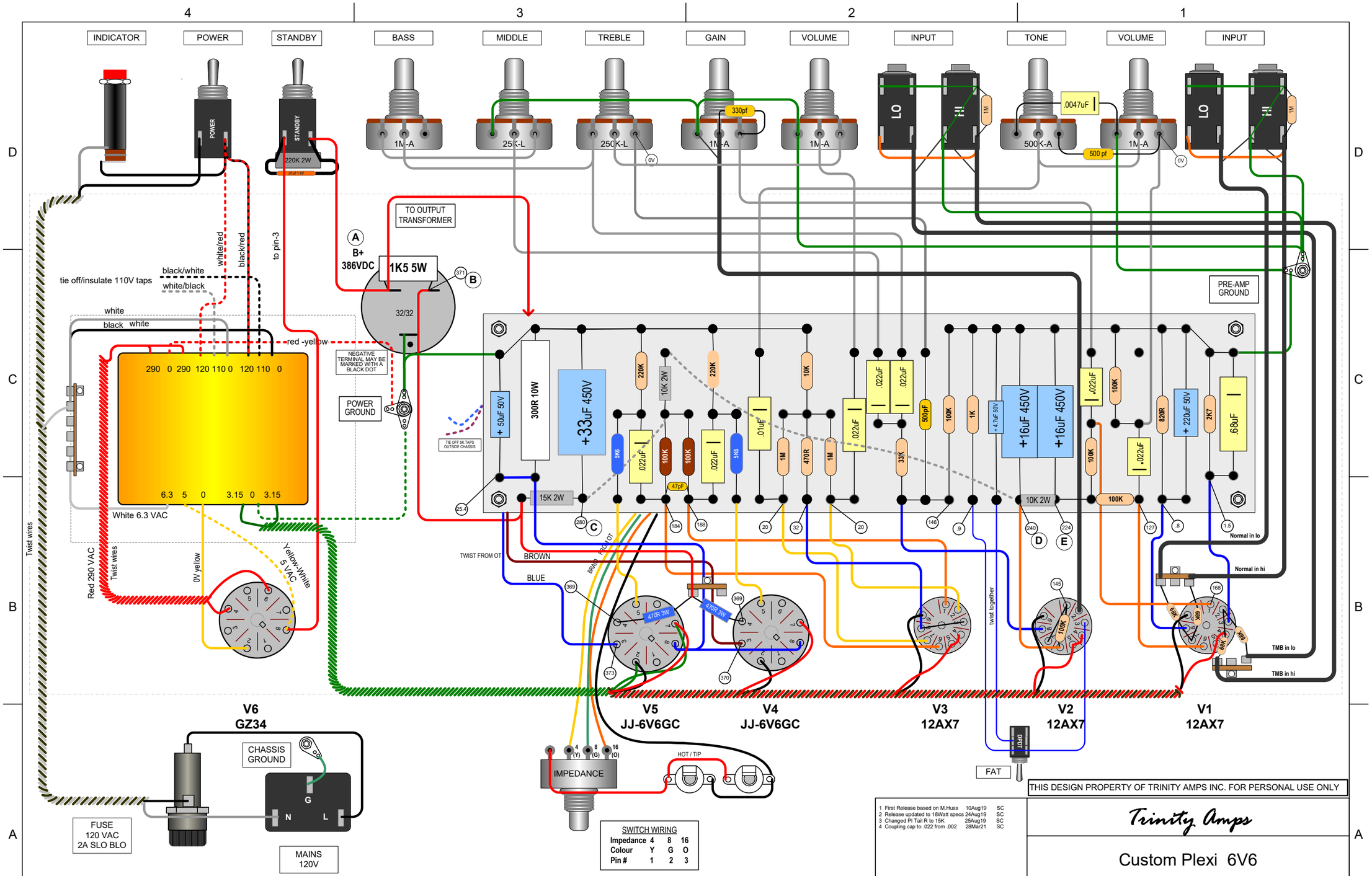

SWITCH WIRING			
Impedance	4	8	16
Colour	Y	G	O
Pin #	1	2	3

Mounting Hardware	Wire
#4 screws – tubes, terminal strip, pre amp ground, IEC Mains connector	22 ga solid – alternating colours from board to tube; board to controls
#6 screws – power ground, stand-offs	22 ga twisted – heater supply
#8 screw – Chassis ground with lock washers, transformer	18 ga stranded – power supply

1	First Release based on M.Huss	10Aug19	SC
2	Release updated to 18Watt specs	24Aug19	SC
3	Changed PI Tail R to 15K	25Aug19	SC
4	Coupling cap to .022 from .002	28Mar21	SC

THIS DESIGN PROPERTY OF TRINITY AMPS INC. FOR PERSONAL USE ONLY

Trinity Amps

Custom Plexi 6V6

SIZE	FSCM NO	DWG NO	REV
			4
SCALE 1 : 1		SHEET 21 OF 66	