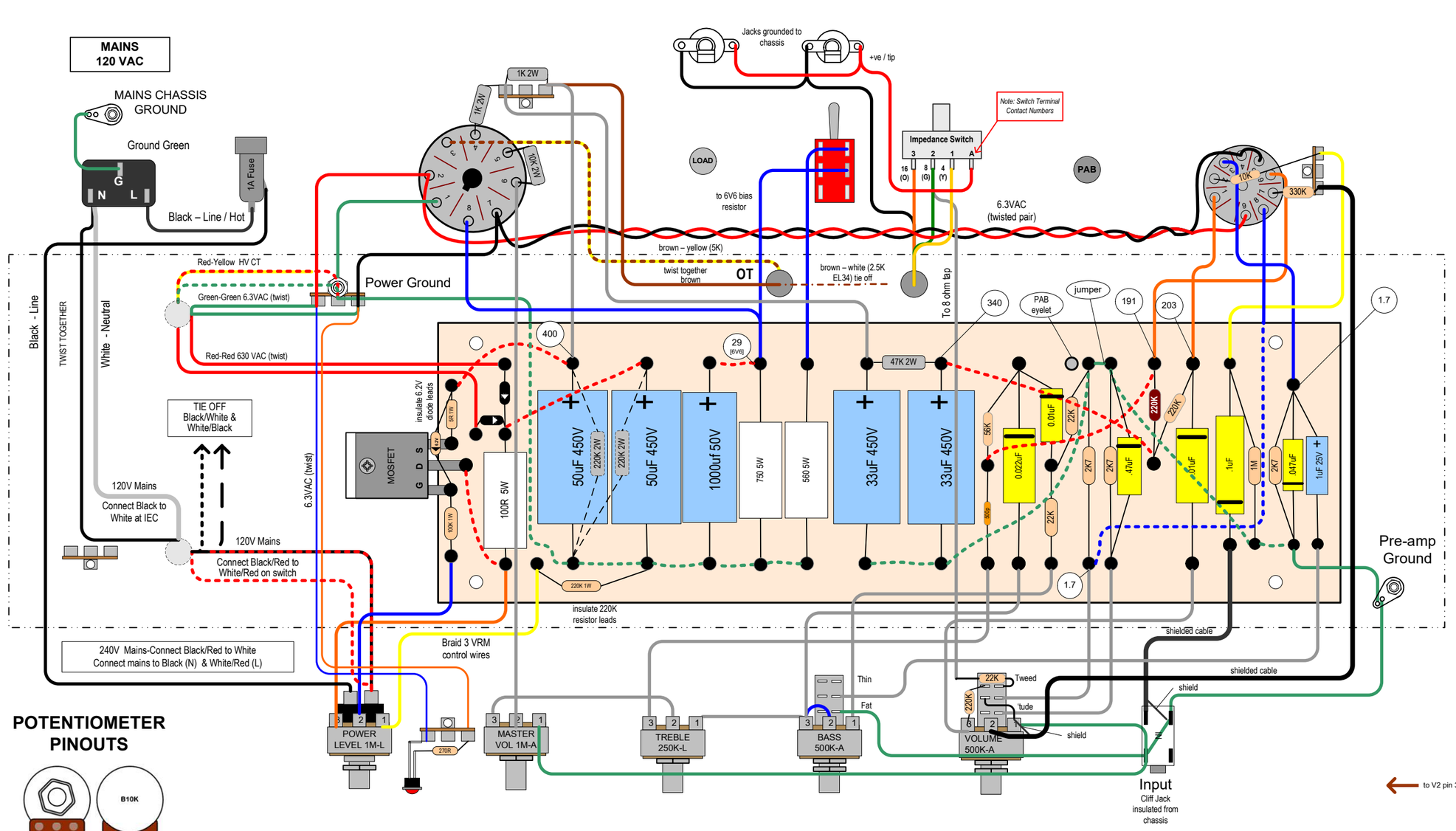


**HARDWARE**

4-40 X5/16" screw – attach sockets, pre-ground, FET, terminal strips with nuts
6-32 X 3/8" screw – power ground with lock nut
6-32 X 1" + stand-off – screw into chassis, install stand-off & nut to mount board
8-32 x 3/8" screw – Mount OT, PT, mains ground with locknuts
10-32 X 1" - attach chassis to cabinet, with lock washer & washer

| REV. | DESCRIPTION | DATE | BY |
|---|---|---|---|
| 1 | Initial drawing | 07/16/09 | SC |
| 5 | added fat/thin ; impedance/6L6 | 04/19/10 | SC |
| 6 | revised VRM layout; bias res | 05/05/10 | SC |
| 7 | Updated as first prod version | 05/24/10 | SC |
| 8 | Updated per first prod version | 06/03/10 | SC |
| 9 | Bass Ground moved | 06/20/10 | SC |
| 10 | grid resistor move to pin 2 & shielded cable added on input | 09/20/10 | SC |
| 11 | 1M moved to other side of .1 cap changed ref. V1-6 to 1.7V | 03/25/11 | SC |
| 12 | updated 220K res to 12AX7, flipped filter caps | 06/25/11 | SC |
| 13 | reversed 220K res to 12AX7, | 10/25/11 | SC |
| 14 | moved MV ground to input jack ground | 01/2/12 | SC |
| 15 | moved LED; removed 1- 220K 2W | 8May13 | SC |
| 16 | colour coded wires | 25Jun13 | SC |
| 17 | Changed VRM low limit res. To 220K | 01/5/14 | SC |
| 21 | Added PAB Mod | 25Nov16 | SC |
| 22 | Added IEC mains connection | 29Nov16 | SC |
| 23 | Change pin 8 to pin 3 on EL34 Mod | 8Dec16 | SC |
| 24 | Update output jack positions | 23Dec16 | SC |
| 25 | Updated for new Power Transformer | 23Nov18 | SC |
| 26 | Updated for new chassis | 7Jun18 | SC |
| 27 | Updated Bias Switch | 26Jun19 | SC |

**Notes**

1. Voltages Measured in Tweed Mode with B+ @ 400V using 6V6 Tube
2. For lowest noise, or if noise occurs at max. gain settings, use shielded cable from board to V1 330K; from MV wiper to V2 pin 6 (6V6); from 8 ohm tap to 22K feedback resistor. Ground shield at closest component ground.

THIS DESIGN PROPERTY OF TRINITY AMPS INC. FOR PERSONAL USE ONLY

# Trinity Amps

## Tramp

| SIZE | FSCM NO | DWG NO | REV |
|---|---|---|---|
| | | | 27 |
| SCALE 1 : 1 | | SHEET 2 OF 28 | |