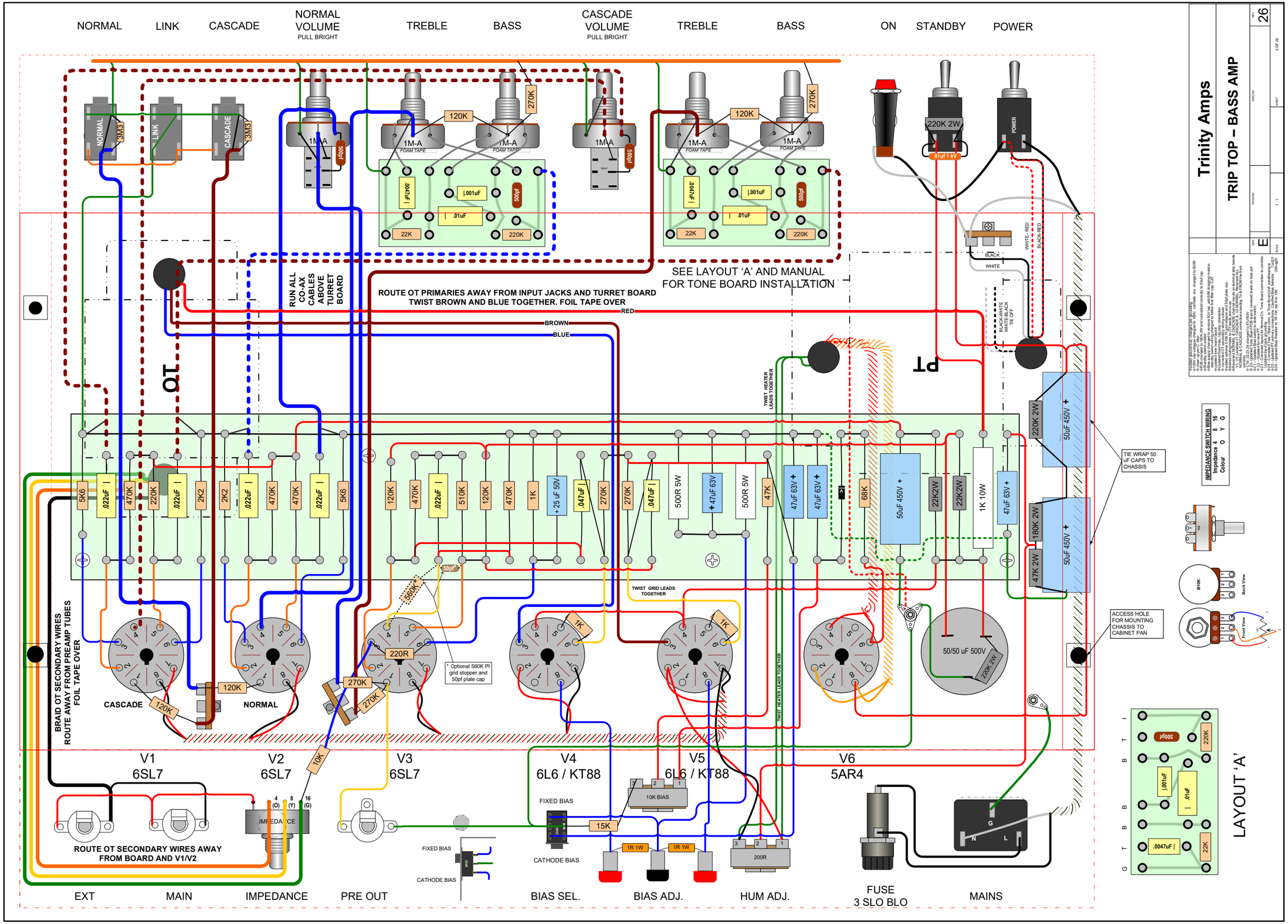

NORMAL
LINK
CASCADE
NORMAL VOLUME
PULL BRIGHT
TREBLE
BASS
CASCADE VOLUME
PULL BRIGHT
TREBLE
BASS
ON
STANDBY
POWER
SEE LAYOUT 'A' AND MANUAL FOR TONE BOARD INSTALLATION
RUN ALL CO-AX CABLES ABOVE TURRET BOARD
ROUTE OT PRIMARIES AWAY FROM INPUT JACKS AND TURRET BOARD TWIST BROWN AND BLUE TOGETHER. FOIL TAPE OVER
RED
BROWN
BLUE
TWIST HEATER LEADS TOGETHER
TWIST GRID LEADS TOGETHER
TIE WRAP 50 uF CAPS TO CHASSIS
ACCESS HOLE FOR MOUNTING CHASSIS TO CABINET PAN
BRAID OT SECONDARY WIRES ROUTE AWAY FROM PREAMP TUBES FOIL TAPE OVER
CASCADE
NORMAL
* Optional 560K PI grid stopper and 50pf plate cap
V1 6SL7
V2 6SL7
V3 6SL7
V4 6L6 / KT88
V5 6L6 / KT88
V6 5AR4
ROUTE OT SECONDARY WIRES AWAY FROM BOARD AND V1/V2
FIXED BIAS
CATHODE BIAS
10K BIAS
EXT
MAIN
IMPEDANCE
PRE OUT
BIAS SEL.
BIAS ADJ.
HUM ADJ.
FUSE 3 SLO BLO
MAINS
LAYOUT 'A'
IMPEDANCE SWITCH WIRING
Impedance 4 8 16
Colour O Y G
Trinity Amps
TRIP TOP – BASS AMP
26