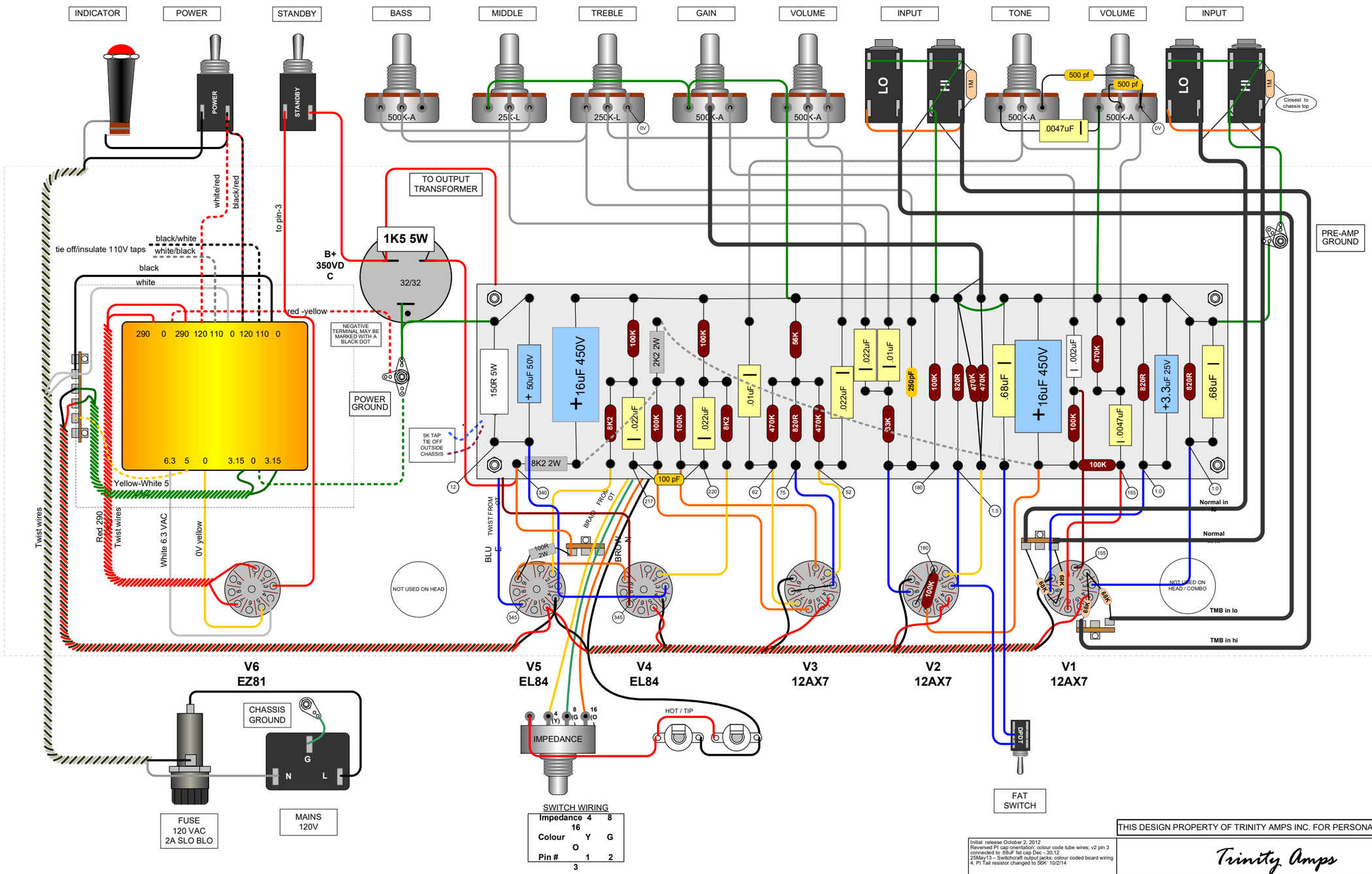

SWITCH WIRING

Impedance	4	8	16
Colour	Y	G	O
Pin #	1	2	3

Mounting Hardware

#4 screws – tubes, terminal strip, pre amp ground, IEC Mains connector
#6 screws – power ground, stand-offs
#8 screw – Chassis ground with lock washers, transformer

Wire

22 ga solid – alternating colours from board to tube; board to controls
22 ga twisted – heater supply
18 ga stranded – power supply

Initial release October 2, 2012
Reversed PI cap orientation; colour code tube wires; v2 pin 3 connected to .68uF fat cap Dec -,30,12
25May13 – Switchcraft output jacks; colour coded board wiring
4. PI Tail resistor changed to 56K 10/2/14

THIS DESIGN PROPERTY OF TRINITY AMPS INC. FOR PERSONAL USE ONLY

Trinity Amps

18 Watt Plexi Mk II

(Super Lead, Brown)

SIZE	FSCM NO	DWG NO	REV
			6

SCALE Not To Scale

SHEET 8 OF 48