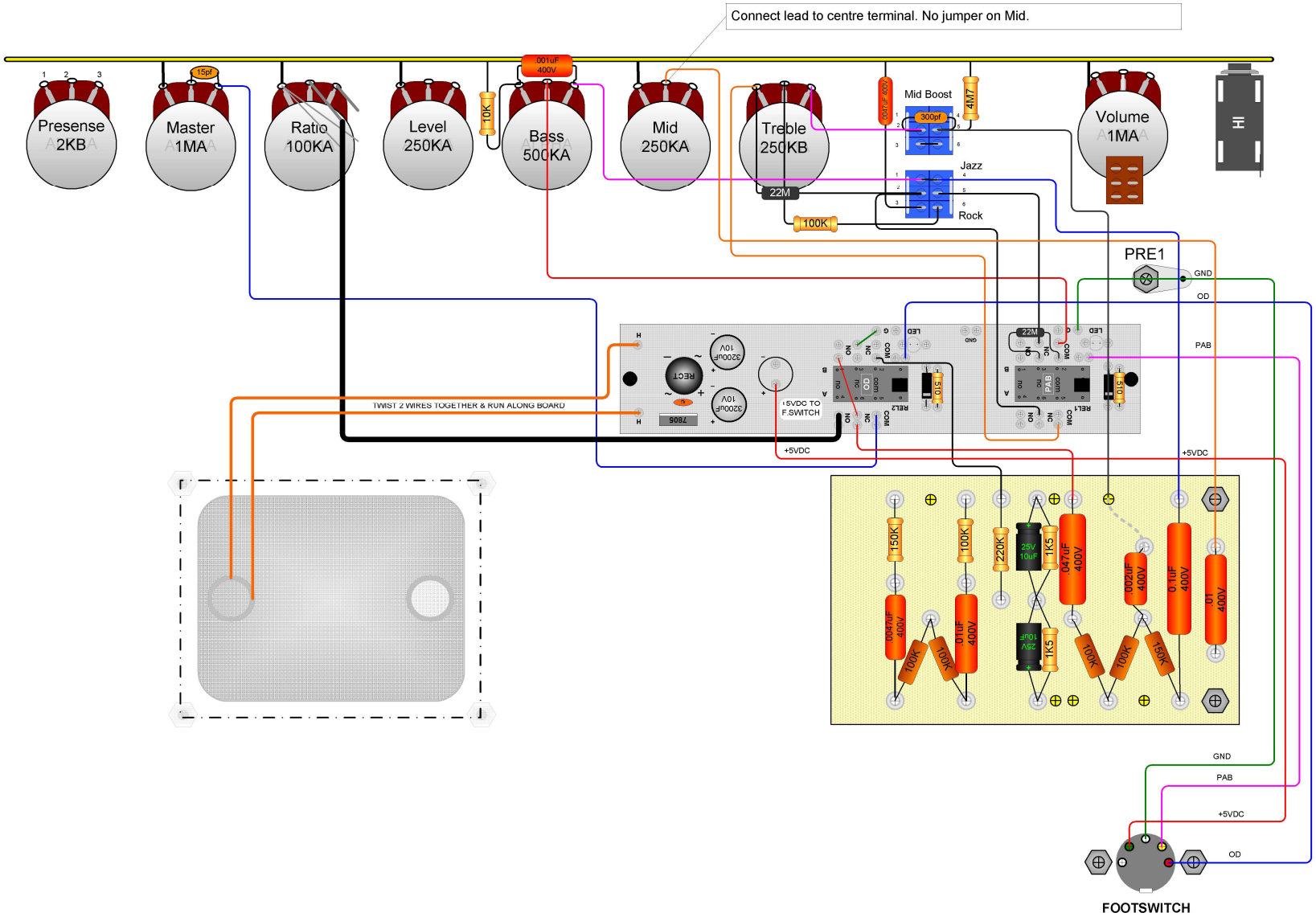

COPYRIGHT TRINITY AMPS INC. 2017-8

Trinity Amps

OSD Relay Layout

inside view

SIZE	FSCM NO	DWG NO	REV
			13
SCALE 1 : 1		SHEET 34 OF 45	