The Trinity Amps

TRIP TOP

Excerpts from the Trip Top Builder's Guide
DO NOT USE FOR BUILDS

For the sole personal use of Trinity Amps Customers.

August 2017, Version 1.96

www.trinityamps.com

Table of Contents

Thank You

Thank you for purchasing your TRIP TOP kit from Trinity Amps. We truly hope that you enjoy building it and that it will be enjoyed for many years. If you have any questions please do not hesitate to contact us and.

Please be sure to check the package contents in case there are any missing items.

We are always looking for feedback form our Customers on our products. We have checked the build instructions over thoroughly and are confident in our product. However, mistakes do happen so our advice is that as you connect each wire and part according to the layout, cross-check against the schematic. If you find any inconsistencies, or have any concerns, please let us know. Do not hesitate to contact us! We want this build to be successful for you and for Trinity Amps!

We're confident that you will like our product and our support and when you're completed, we'd appreciate your comments posted on any of the internet forums such as thegearpage.net, 18watt.com, AX84.com or trinityamps.com. You will find some extra business cards in the package. Please keep one and pass the rest around.

We know you have a choice in suppliers and do appreciate your business. If there is any other product we can provide to you or your associates, please get in touch and we will be happy to discuss requirements.

Sincerely,

Stephen Cohrs,
Trinity Amps

Web site: **www.trinityamps.com**
email: **stephen@trinityamps.com**

Version Control

Version	Date	Change
1.0	19Mar2015	First draft
1.1	23Mar2015	Updated based on comments from Chris Moir
1.2	27Mar2015	Tone board tip added; installation of control bus bar updated
1.3	19Apr	Updates based on feedback
1.4	24Apr	Updates based on Chris Moir's first build
1.5	20May	Removed terminal strip on V6, p. 27 (R. Coppola)
1.6	28Jun	Updates to power supply and heater wire sections (J. Waterkotte & R. Coppola)
1.7	18Jul	Many Updates including: Sec. 2 , 6SL7 pin numbers ; Sec. 4, PT colours added; Test PT V4-V5 pins; PSU filter cap updated to 47uF from 100uF; bias R updated to 22K from 47K; Sec. 5 enhanced section picture of turret board; added alternate installation; corrected pin numbers in pictures of terminal strip installation at V1,V2 & grid resistor on V4, V5 Sec. 7 Made a note to lengthen the centre tap wire of the OT; clarified the wiring of PSU ground and Bias supply; updated bias resistor to 47K from 22K in PSU HiV Sec. 8 added note to set meter to 600V Sec. 10 Revamped the Start-Up procedure; added cathode bias section
1.9	15Aug	Enhanced Distortion troubleshooting with more tips; Noted wiring of OT to Impedance switch.
1.91	23Nov15	Corrected connection to Bias supply from Rectifier from pin 8 to pin 6.
1.92	27Dec16	Updated BOM for 20Ga BUS BAR; updated instructions on BUS BAR installation
1.93	31Mar17	Corrected primary impedance from 5500 to 6800 ohms
1.94	9May17	C19, 22,23,24 changed to 47uf/63V
1.95	22Aug17	Updated Connecting the Tone Boards instructions
1.96	4Sep17	Updated for Bias Selector slide Switch. Was toggle switch; Updated BOM

Trip Top Description

Based on several years of vintage Ampeg B15 designs, the Trip Top combines the original circuits of both the Ampeg B-15NC (1964) as well as the later B-15NF (1965-67). The B-15-NF channel has the volume control section before the tone stack and in the B-15-NC channel it is after. Maintaining these circuits keeps the same gain structure and biasing found in the original B-15N amp designs, helping to preserve their true heritage. It also has two power supply settings - Cathode and Fixed bias to provide further tone structure.

The Trip Top is designed to output approximately 30 watts in cathode bias mode and 40 watts in fixed bias mode using 6L6GC tubes.

It was possible to get it to sound very, very close to Sly-Fi Chapel's 70s B15N using an Ampeg Portaflex 15" Bass cab, so it's tone has been proven authentic. But it has some extra hot sauce the original doesn't and it absolutely kills for bass. Sly-Fi Chapel recently re-amped all the bass on a current project as a result and found the extra headroom and tone stack arrangements made it better than their studio B15 in a lot of ways.

But calling it a bass amp is missing half the point. It's an AMAZING guitar amp. It has a different sonority than other Trinity offerings which have a focus on a very smooth but sparkly top end (the Triwatt being the one that slightly deviated). The Trip Top is the opposite - there's still a nice smooth top end -band plenty of it - but this amp is all about low end girth and grind. It's got a nice big tight booty (even with the bass tone knob on full!) that inspires rocking out down low on the neck with open chords!! Fixed bias has a more forward, clear, present sound... Cathode bias gives it a saggier feel but adds this gorgeous rich high harmonic overtone to everything - really nice for those ringy single coil U2-esque type sounds

The Trip Top combines the original circuits of both the Ampeg B-15NC (1964) as well as the later B-15NF (1965-67). Maintaining these circuits keeps the same gain structure and biasing found in the original B-15N amp designs, helping to preserve their true heritage.

It has two channels each have volume with a 'Pull Bright' switch, treble and bass controls. The first channel, NORMAL, from the B-15-NF, has the volume control section before the tone stack. The second channel, CASCADE, comes from the B-15-NC which has the volume control section after the tone controls.

The power amp section has two switch selectable bias modes - fixed (B-15NF) and cathode (B-15NC). While 1N4007 solid state rectifier diodes were used for the "NB"

Guitar Amplifier Basics

Electric guitarists can be fairly criticized for their reluctance to change to new ideas and technologies; however, there is no doubt that a classic 1950's guitar and tube amplifier in good condition still sounds great in modern recordings. This is a testament to good design from the start. What has improved today is consistency, and the cost benefits of production line manufacturing. This is offset by the rarity of good guitar wood (it makes a huge difference, even on an electric guitar), increased labour costs for both guitars and amplification equipment, and the availability of good and consistent quality tubes.

There is also an element of nostalgia, with memories of many of the great players of years gone by, and the desire to use the same types of instruments and equipment to recapture the magic. Vintage instruments and equipment have also become valuable collectors items (some with very inflated prices) which adds further to the desirability of older tools of the trade. There has been a recent trend by many companies to re-market their original instruments and equipment; new guitars can even be bought now 'pre-aged'!

This desire for vintage equipment is also related to guitarists' reluctance to part with tube amplification, and there are many reasons why tube and solid state amplifiers behave differently. Quite simply, if players prefer the sound of tubes, they will continue to buy and use them. Below are some fundamentals.

General Amplifier Operation

Some DO NOTS

- **Never, Never, Never** run the amp without a speaker plugged in. This can cause major damage.

- Do not flip the power switch off, and then back on rapidly. This can cause power supply damage.

- Never replace a burned out fuse with a bigger-amperage one. Remember - there was a reason the first one burned out, usually protecting something more expensive. Putting a bigger fuse in will just ratchet up the power level until something really vital burns out. If the second equal-rating fuse pops, turn it off and get a tech to look at it.

- Never ignore signs of high heat inside - a wisp of smoke or a burning smell is **NOT** normal.

- Your amp produces lots of heat, and will continue to do so even if you block the fresh air vents. Blocking the vents will overheat the amp and you may have to get some very expensive repairs done.

- Never ignore a red glow other than the small orange ends of the filaments. A red glow over a large part of the internal plates of the output tubes means they're about to melt. If you notice this, shut it down and get a tech to help you find out what it wrong.

Some DOs

Add another speaker into the "external speaker" jack; a mismatched speaker load won't kill it, while an open circuit (disconnected speakers) may do so.

Overdrive the stuffing out of it. Tubes are very forgiving of massive overdrives, unlike solid state gear. As long as they tubes don't overheat for long periods, it's not fatal.

Introduction to Vacuum Tubes and Common Terms

Reprinted with permission from Aron from diystompboxes.com
Here are a few terms that you may see online when referencing tube schematics. Like distortion pedals, tube circuits seemingly have their own language! I present this knowledge in the hopes that it may help you decipher the interesting life of tubes! :-) Below, is a picture and a very simplistic view of a tube stage.

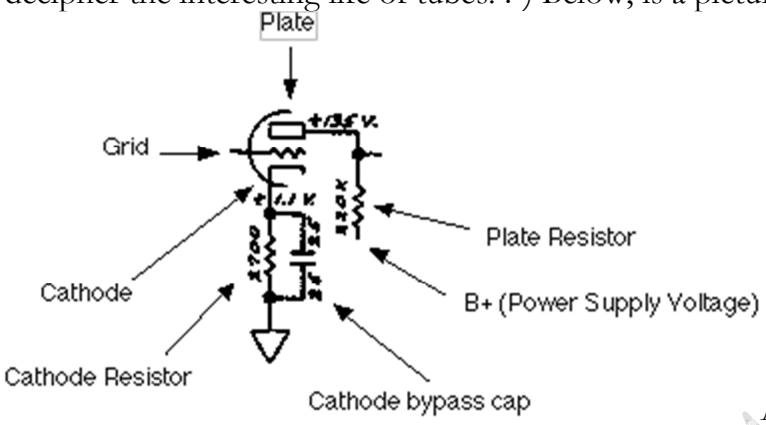

As you can see above, in this tiny snippet of a tube schematic, the terms you commonly see are there in this triode stage example.
Plate - the plate is usually connected to a plate resistor which is usually connected to the B+ or power supply voltage. Typical Plate Resistor values are 100K, 150K, 220K. Larger values equal more gain.
The **Grid** is where the signal enters the tube.
The Cathode is usually connected to a cathode resistor which usually goes to ground. The cathode resistor, along with the Plate resistor, control the gain of the tube stage. Typical values are anywhere from 100 ohms to 10K. Smaller values = more gain.
It is common to see a cathode bypass cap connected in parallel with the cathode resistor. By altering the values of the cathode resistor and cathode bypass cap, it is possible to roll off various degrees of bass with this triode stage. The cathode resistor and plate resistor control the biasing of the tube. The cathode bypass cap also gives the stage more gain.
Sometimes you see a capacitor in parallel with the plate resistor, much like the cathode resistor bypass cap. It is usually a small value (i.e. .001uF) and it rolls off highs in the stage. Sometimes you see a high frequency roll off cap going from the plate pin to the cathode pin - 350pf->500pf in value.

Biasing Tube Amps

The 'Biasing' of tube amps commonly refers to "setting the idling current in the Power Tubes in Push-Pull output stages" - the No-Signal or Static (=DC) Current Levels are the target spec and the surrounding voltage conditions are adjusted accordingly when possible. The voltage-to-current bias relationship that exists for a power tube under a given bias set will respond differently from tube to tube (between brands especially) AND, more-so, over time of use. Some amplifiers have mechanisms for automatically setting the bias, Cathode Bias for example, and others don't and are called Fixed Bias. Some Fixed Bias amps have a control to change the bias setting. These are sometimes called Variable Bias.

In Fixed Bias/ Variable Bias push-pull amplifiers a separate power supply circuits is employed to generate a negative voltage with respect to chassis ground - this voltage is fed to the grid terminal of the power tubes through bias feed resistors (typically 47k to 220k ohms) ... this is the negative Bias voltage that is typical written in amplifier schematics, in variable bias amplifiers this voltage can be "swept" through a potentiometer.

In Principle As the bias voltage in the grid is brought more negative with respect to the chassis ground (say, from -42volts to -52volts) then you'll typically find that the gain of the output stage will drop along with the drop in idling currents ... if the bias voltage is made less negative (opposite) then you'll find the gain of the output stage going the other way along with the increase in idling currents ... Note: some players mistakingly see the bias control as merely another volume control - the Red-Knob Fender Twins are notorious for this because of their availability of external control ... guitarists should tell each other to be cautious playing with that control alone unless they plan on making a proper science of it (!)

The Bias Limits
There are two primary biasing LIMITS on the network variable sets that need to be observed when biasing power tubes in a clas-AB push-pull stage.

The **Lower Biasing Limit**, when the amp is underbiased, produces a cross-over notch when observing AC waveforms on an oscilloscope . When a push-pull output stage is underbiased (bias voltage is too negative) it often sounds fuzzy and weak.

The **Upper Biasing Limit** leads to a situation where the dissipation rating of the power tubes is exceeded during normal operation. When the power tubes are running too hot the amplifier will sound very grainy and you might even hear some background crackling when not playing. This is a sign the power tubes are over biased (too much current at idle). Another tell-tale sign that your power tubes are biased way too hot is if the outer plate inside the tube turns red when you play.

Aside from frying the tube this situation can potentially damage the output transformer, so if you ever see this happening while playing it's best to shut the amp down right away and have it serviced. This is an extreme situation that shouldn't happen under proper operating conditions.

Building an Amp

Warning: Do not attempt to build a guitar amp unless you know how to work safely with the dangerous voltages present in a tube amp. These can exceed 700 volts.

Introduction

If you have purchased your Trinity Amp as a kit, this guide will help you build a tube guitar amplifier. It is oriented towards someone who knows a little about electronics but is new to do-it-yourself amps. It outlines a simple path to getting a quality amp build.

Switches and wire

Use standard UL approved switches with a 125V/3A rating for the Power and Standby switches. Use 22 or 20 Gauge insulated solid wire with a 600V rating. It is good to get a variety of colors so you can color code your wiring.

Use 18 Gauge stranded for mains wiring.

Physical layout

Make sure the jacks, sockets and pots mounted along the edge won't interfere with parts mounted on the underside of the chassis. Imagine how chassis will be mounted in the cabinet and make sure there is enough clearance for the speaker and mounting brackets. Trinity amp chassis are laid out with serviceability and neatness in mind.

Grounding

It is recommended that you follow the layout provided with your Trinity Amp. It has been tested and has proven reliable. If you choose to deviate, consider the following information.

Amps traditionally use the chassis for signal ground. This is not the best choice since it can create ground loops and bad ground connections may develop over time. It is better to use star grounding in which all of the local grounds are collected at a single 'star ground' point. With star grounding there is only one connection between the chassis and signal ground.

Here are some rules for laying out a star ground. More information on grounding can be found in the Tube Amp FAQ and the Tech Info page of Aiken Amplification.

(1) Connect the power transformer center tap directly to the negative terminal of the first power supply filter capacitor (cap) then run a separate wire from the negative terminal to the star ground point.
(2) Collect the ground points of each tube and its associated resistors and capacitors to a local ground point that is not connected to the chassis. Run one wire to the star ground point from each collection.

Tube Pin Numbering

The pins on an 8-pin tube socket are numbered 1 to 8 in a clockwise direction when viewed from the bottom. Note that there is a key to ensure the tube is inserted correctly into the socket.

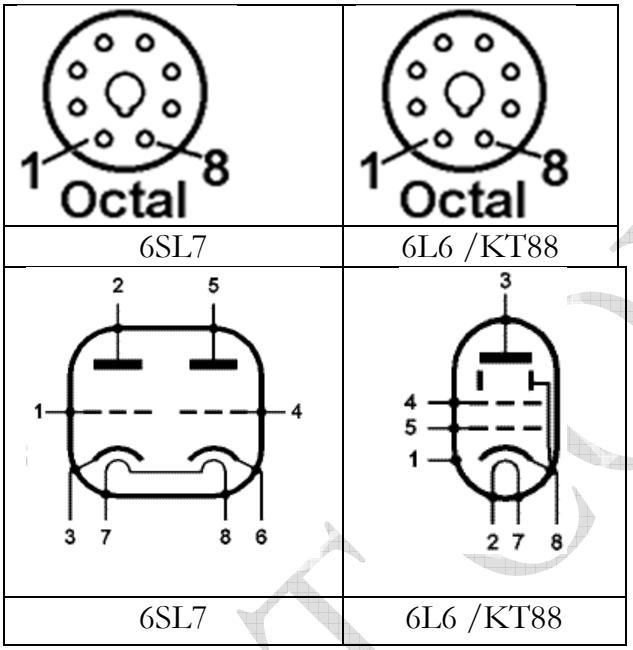

The pins on the potentiometers are numbered 1 to 3 from left to right when the shaft is facing towards you and the pins are at the top.

Assembly Steps Summary

1. Install Hardware on the Chassis.
2. Wire up the heater wires to the sockets.
3. Install Transformers on the chassis.
4. Wire up the power supply - Mains, Transformers, power switch and pilot light.
5. Assemble the turret board and Install on chassis.
6. Connect turret board leads to tubes installing off-board parts as you proceed.
7. Connect turret board leads to controls installing off-board parts as you proceed.
8. Remove input jacks. Wire with 3.3M film resistors and shielded cable. Re-install.
9. Check Wiring.
10. Follow Start-Up procedure.

TIP: On a copy of the layout, highlight the connections as you complete them to make sure they are done correctly.

1. Install the Hardware

There are many nuts bolts etc. required. Here are some guidelines.

Part	**Where to use**
4-40 X 5/16 (no nuts reqd.)	Mount tube sockets, [optional lock washer under head on threaded chassis];
4-40 nuts	Mounting terminal strips, ground point, IEC socket
4-40 X 7/16	*If supplied – to mount tube sockets with terminal strip, use nut to hold terminal strip with nut/lock washer or lock nut. Use with nuts/lock washer to mount IEC connector, 5 lug terminal strip and 1-#4 pre-amp chassis lug.* *Mount tube sockets on **non-threaded chassis** with lock nut*
6-32 X 3/8	Mount 3 star ground # 6 chassis lugs with lock nut. Mount Capacitor clamp; mount power ground lug in some amps
6-32 X 1	Mount turret board to chassis using stand-off. Use with lock nut.
8-32 X 3/8	Mount Mains ground **ONLY**. Use KEPS nut with lock washer and #8 chassis lug.
8-32 X 3/8	Mount Output and Power trans. With KEPS lock nuts.
8-32 lock nuts	"KEPS" for power transformer; power ground bolt.
10-32 X 2	Mount chassis to cabinet. Use cage nuts in square holes pressed into chassis.

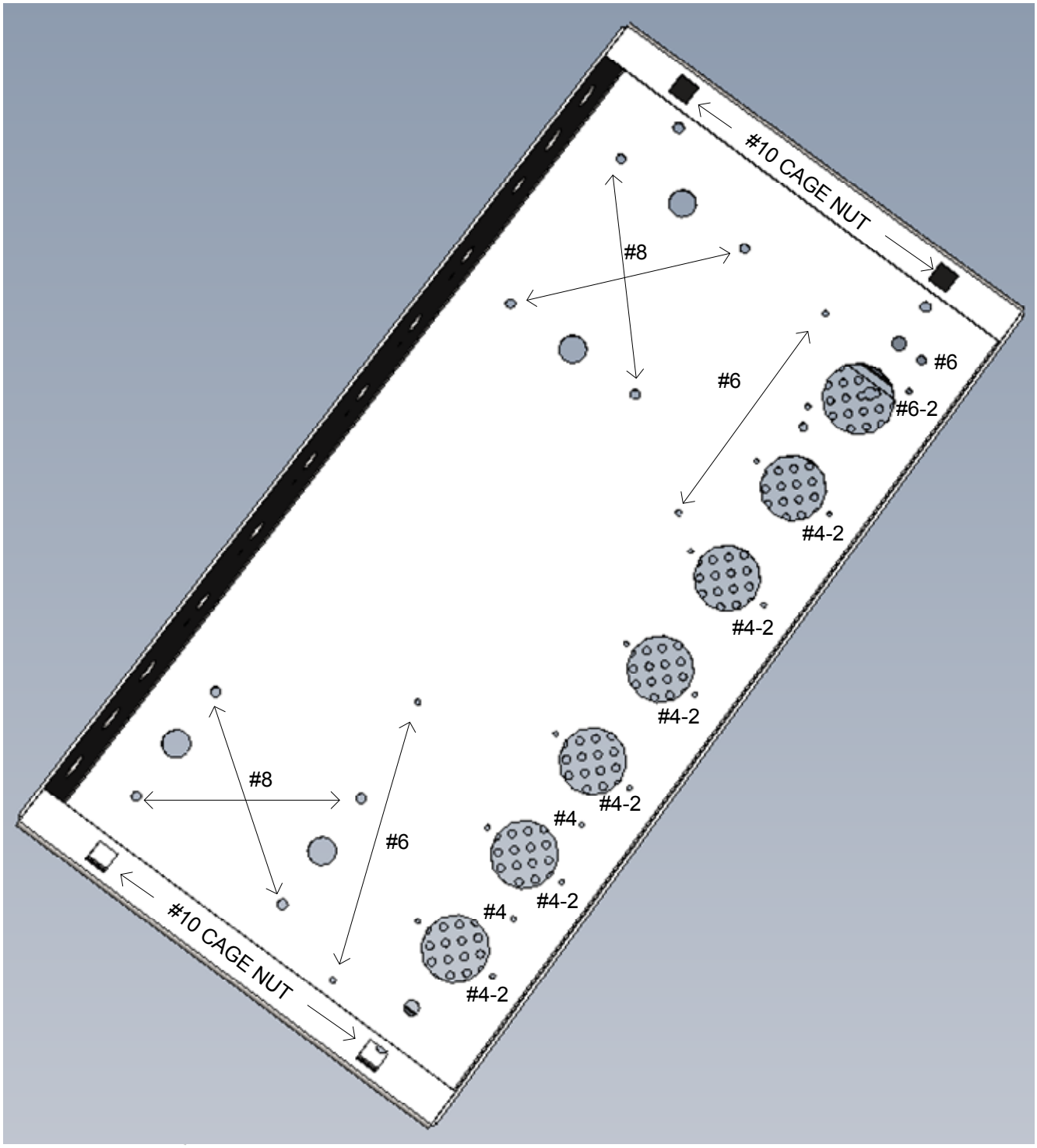

Insert the 4 Cage Nuts by setting them in place in the square hole, one side fitting into the square hole and then using a straight blade screwdriver, press in the cage on the opposite side so it snaps into position when pushed into the square hole indicated above (#10 Cage Nut).

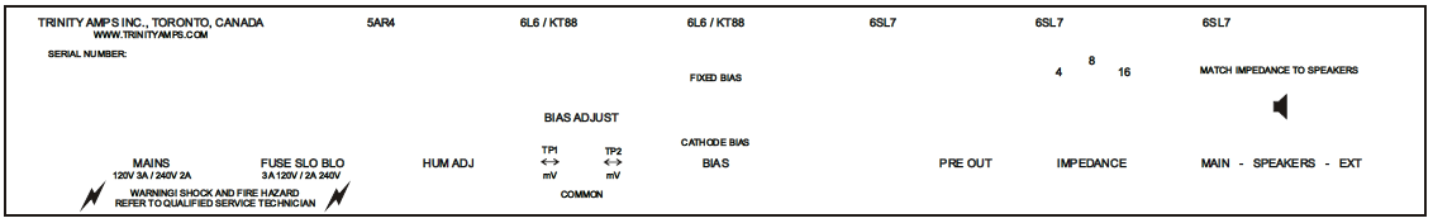

TRIP TOP Rear

2 Wiring

Here is a guideline for wiring the kits with the supplied wire:

- Use 22 gauge colour solid for hook up from board to tubes using the following colour code chart.

22 Gauge Colour		6SL7	6L6 / KT66
Orange	Plates	2, 5	3
Yellow	Grids	1, 4	5
Blue	Cathodes	3, 6	8
White	Controls to board		
Green	Ground		

- Use 20 gauge solid pre-twisted Red-Black pair supplied for tube heater wiring
- Use Black, White 18 Gauge, stranded, for power supply hook up - to transformers from IEC socket.
- Re-use cut offs from the transformers for the power supply side.
- Use RG174U for coaxial connections as indicated on the layout

Grounding Scheme

The TRIP TOP use a single star-point grounding scheme where the power side of the amp is connected to a single common ground point, and the preamp part is connected to the same point on the chassis.

For grounding these amps, we strongly recommend that you follow the layout provided. We don't recommend that you deviate.

There is also a separate AC supply safety ground point near the IEC connector, which doesn't form part of the actual amplifier circuit. WARNING: THIS CONNECTION IS VITAL FOR SAFETY REASONS.

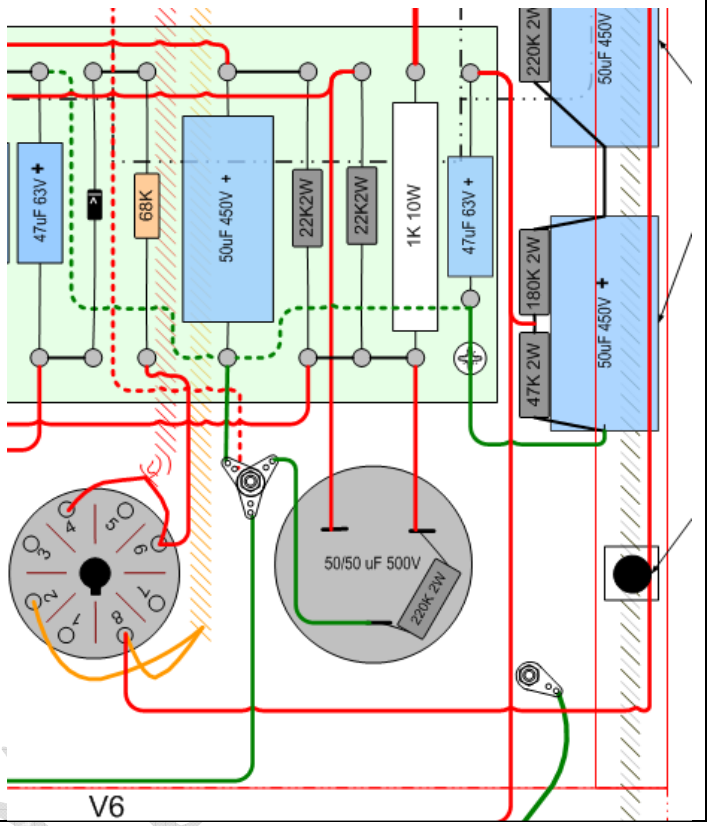

Heater Wiring

This is tight wiring so set it up correctly and check and then finally install the power transformer and solder everything in place on V5.

Note: After you install the power transformer, in the next step, you will connect each of the Green twisted heater wires from the Power Transformer to the Lower hole in the socket tube pins 7 and 2 of V5. See next step on installing the power transformer. You may choose to install the Power Transformer now, but it will make moving the chassis difficult.

For connection to the tubes heater wires and hum control left and right terminals, connect two twisted 20 gauge wires to the Upper hole in the socket tube pins 7 and 2 of V5. Then connect these to pins 2 and 7 respectively of Power Tube V4. From there, the wires daisy chain across the preamp tubes, V3, V2, V1 Red wire to pins 7 of each preamp tube and the Black wire to pin 8. This phasing or 'polarity' on the preamp heaters needs to be maintained. The two power tube sockets V5, V4 also need to have their heaters wired in the same phase (using the same colours) to minimize hum.
Connect a short piece of twisted 20 gauge wire from the Upper hole in tube pin 7 and 2 of V5 to the hum control left and right terminals,

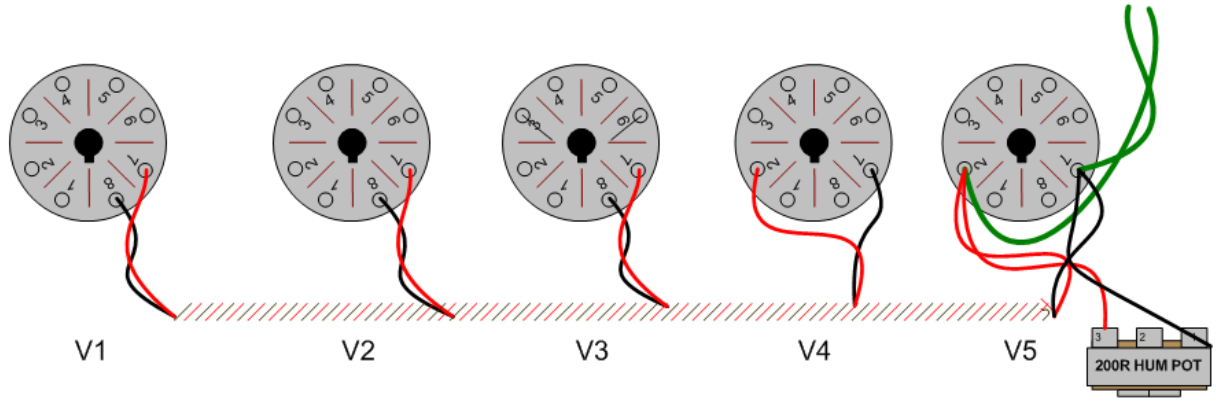

It is important to wire the tube filaments carefully. Use the pre-twisted 20 gauge solid core wire to minimize any hum.

3 Install Transformers

Install the power transformer. The Power transformer lies down along the chassis 'long axis'. Align the AC mains leads so they face towards the outside of the chassis. The High voltage (Red - Red/Yellow - Red), Heater leads (Green – Green)and Rectifier Heater leads (Yellow –Yellow) face inwards. Feed the leads through the 2 grommets installed in the chassis. Bolt the transformer in place with the supplied 4 each of 8-32 bolts & KEPS nuts.
On the screw closest to the power switch, install a Terminal strip under the nut. You may need to cut the mounting tab in order to allow it to "open up" to fit the #8 screw.
Tightly twist the AC mains lead pairs for your local voltage.

Install the Output transformer. The Output transformer lies down along the chassis 'short axis'. Braid the Primary leads together (Brown – Red – Blue) Braid the secondary winding leads (Yellow (4 ohm), Green (8), Orange (16) Black (Common).
Align the Primary leads so they are pointing towards the front of the chassis. Feed the leads through the grommets installed in the chassis with the Primary and Secondary leads going through separate grommets. Bolt the transformer in place with the supplied 4 each of 8-32 bolts & KEPS nuts. The secondary leads should be in-line with the impedance switch.

4 Power Supply Wiring

Now is the time to wire up the main power feed. Use stranded cut-offs from the transformers or some solid core wire. Start with the IEC socket and ensure it is grounded to the #6 chassis lug on the chassis beside the cap bracket. Tighten the ground tightly. Run a wire from the 'Hot' 'Line' side of the IEC connector to lug on the END of the fuse holder from the SIDE of the fuse holder power switch.

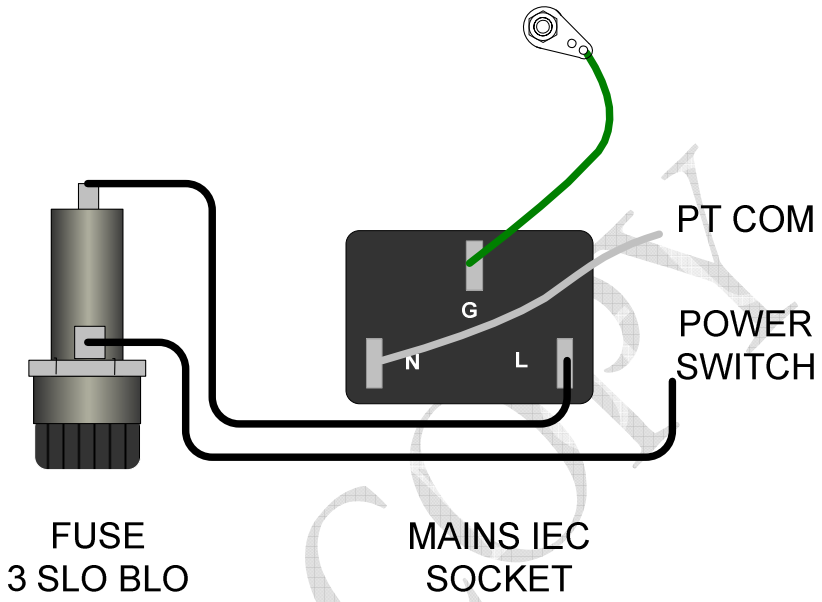

The other side of the IEC socket or 'Neutral' gets connected to the 'Common' side of the power transformer.

Wiring of Mains Power cords: European vs North America			
	Ground	Hot (L)	Neutral (N)
Europe	Green/White or Green/Yellow	Brown	Blue
North America	Green [USA-plug round prong]	Black [Small flat prong]	White [Large flat prong]
European 230V	Green/White or Green/Yellow	It makes no difference how the other two wires are matched.	

From the Power Transformer, Connect the High Voltage Centre Tap Red-Yellow to the power amp 3 lug, Star Ground point located between the 50/50 uF can cap and V6.

From the Power Transformer, take the Green (6.3V Tube Heater pair) pair of wires and tightly twist them. Route the twisted pair wire through the chassis, following the layout diagram, pressing it flat against the chassis. Cut, strip and solder them to the first power tube, V5, Lower hole of pins 7 and 2.

From the Power Transformer, take the Yellow (5V Rectifier Heater pair) pair of wires and tightly twist them. Cut, strip and solder them to the Rectifier tube, V6, pins 8 and 2.

From the Power Transformer, take the Red (High Voltage) pair of wires and tightly twist them.
Route the twisted pair wire around the outside perimeter of the chassis, following the layout diagram, pressing it flat against the chassis. Cut, strip and solder them to the Rectifier tube, V6, pins 4 and 6.

5 Turret Board Construction

If you do not have a pre-built Trinity Amps turret board, now is the time to build it.

Install the jumper wires indicated in Red on the underside or topside of the board. Which side you use is a personal preference. Do not solder in place yet.

Follow the series of pictures below.

Install the components on the board by following the layout – from left to right.

TIP: Run a piece of very fine sandpaper over top of turrets quickly before soldering.

Note: For multiple component leads that must fit into one turret, insert them first and solder once when they are all in place. Bend each component lead at 90 degrees so that it fits into the turret, squarely and neatly. Solder each turret once all component leads that connect to it are in place.

Strip a piece of the supplied 22 gauge solid core wire long enough for each bus bar. Bend it at each end and install it into the two end turrets on the board. Do not solder in place yet. You may want to tack it in place until the other components connected to it are installed.

Carefully identify the board components and their values. **Measure the resistor values to confirm they are correct**. **If you can, check the capacitor values as well**. See the section on how to read Resistor and Capacitor codes.

TRIP TOP Board

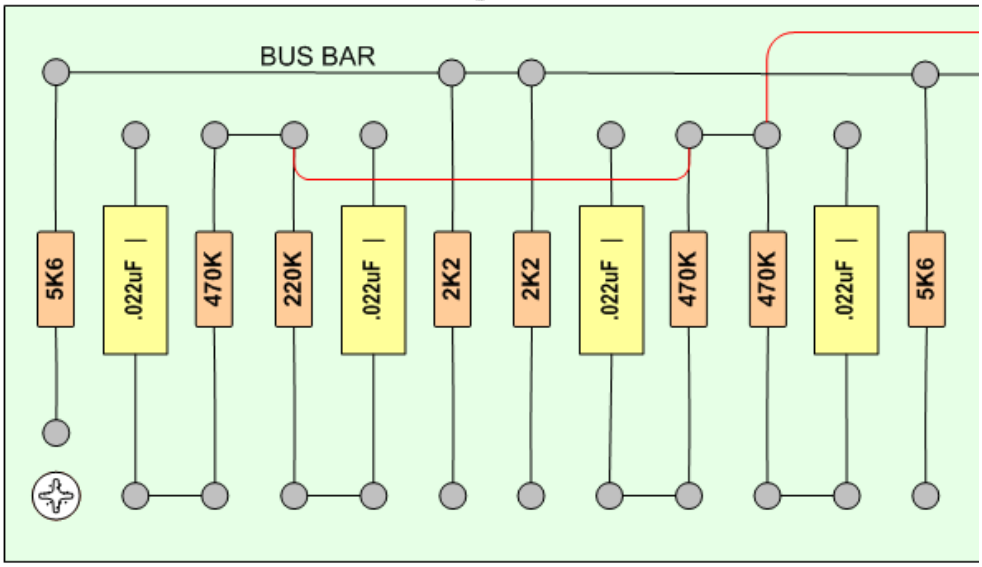

Connect a 120K resistor between the two middle terminals of the Treble and Bass controls

Install the parts from the terminal strips to the potentiometers or tube sockets.

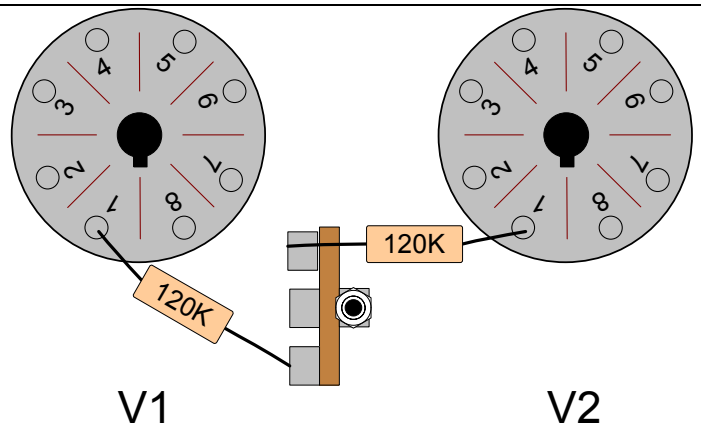	Install parts from terminal strip on chassis and parts on chassis. Connect 120K grid stopper resistors from terminal strip to pins 1 of V1 and V2.
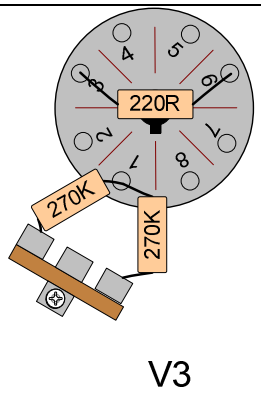	Install parts from terminal strip on chassis and parts on chassis. Connect 2-270K "mixer" resistors from terminal strip to pin 1 of V3. Connect a 220R resistor between pins3 and 6 of V3.
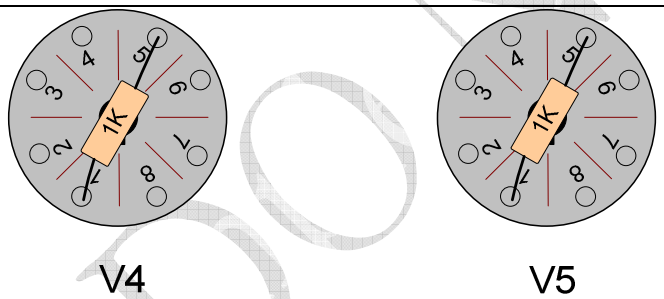	Connect 1K grid stopper resistors between pins 1 and 5 of V4 and V5.

6 Connecting the Turret Board

Now is the time to make the connections from the turret board to the tubes.

7 Output Transformer - Output Jacks

Refer to the Output Transformer schematic. Braid the Blue, Brown and Red primary leads from the transformer to the output tubes. Leave enough transformer lead length to reverse the leads from one 6L6/KT88 to the other if necessary to eliminate amplifier squealing.

Note: Lengthen the Red lead (Centre tap) so that it will reach the B+ terminal on the far side of the turret board. Do this by soldering in a 4" piece of wire (ideally containing Red), stranded or solid. You can use cut-offs from the power transformer installation. You may also want to lengthen the Blue and Brown for convenience.

Start by soldering the Blue output transformer lead to V4 and the Brown to V5, Pin 3.

Connect the Red lead to the B+ turret at the 1K 10W resistor where the standby lead is connected to the board.

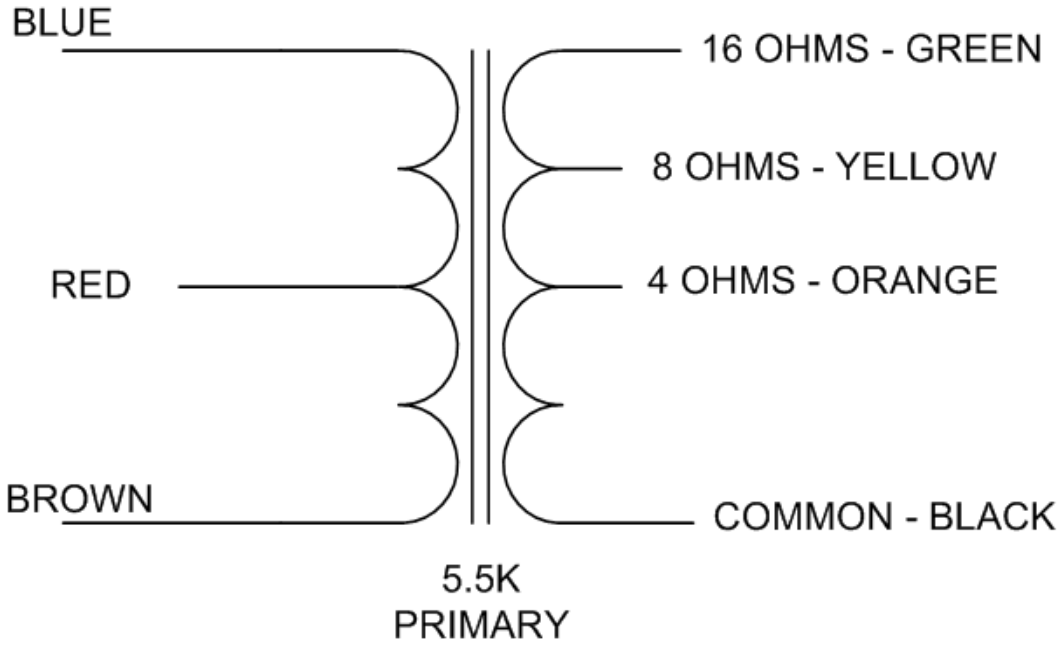

Trinity Amps TRIP TOP Ampeg Design Output Transformer

Connect the Impedance Selector and Speaker Output Jacks

The two channels are wired differently (cascaded and normal).

***Note**: Put a ¾" piece of sponge rubber insulation on the back of each Treble & Bass control. This will insulate them from the Tone Boards.*
Lay a tone board with components facing towards you and make the 5 connections to the Normal Channel Treble and Bass controls with white leads. Make one connection to the Control Bus Bar with a green lead. Leave a little extra lead length so that when you are completed, you can tuck the tone board, into the chassis and up close to the controls. In the final position, the Tone Board components will be facing towards you. Repeat this procedure for the Cascade Channel tone board.

***Note:** If you prefer, because the eyelet tone boards are reversible, you can mount the components on the opposite side and flip them so they face away from the controls.*

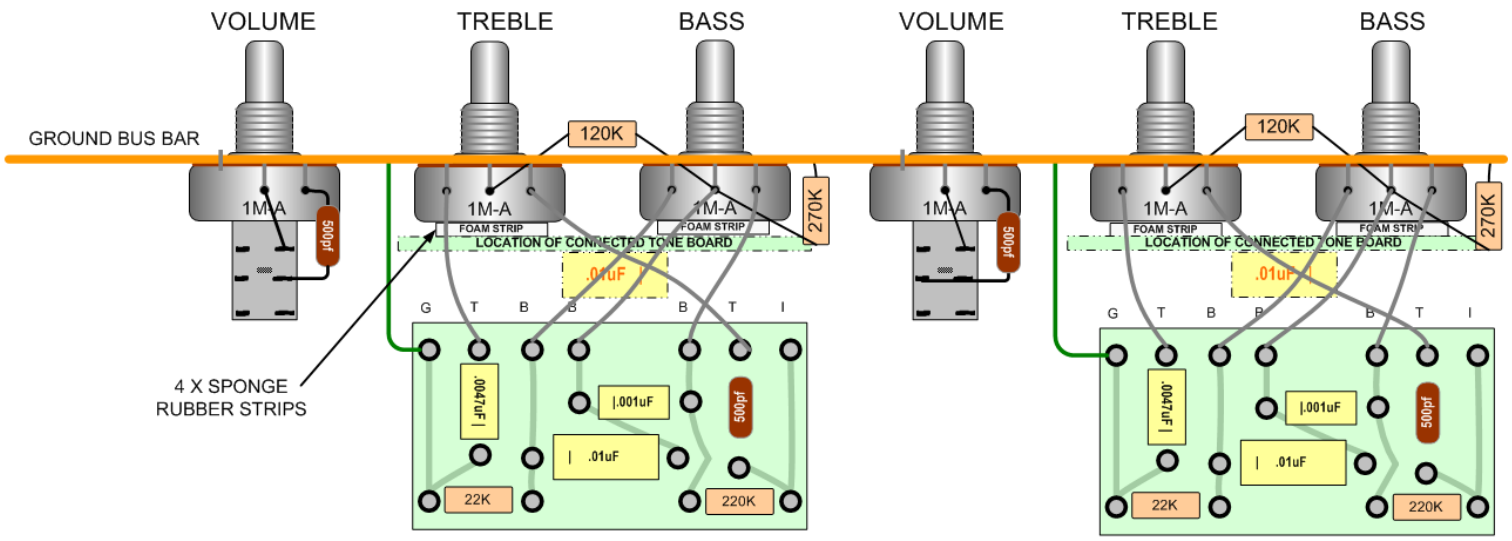

8 Test the Power Supply

Once you have wired up your power supply it is a good time to test that all is connected correctly. This step assumes you tested and passed the AC aspect of your power transformer earlier. In the following steps, B+ is going to go to full voltage **SO BE EXTREMELY CAREFUL**.

Connect your AC voltmeter to the power transformer's High Voltage secondary which is soldered to the Rectifier tube socket across pins 4-6 . Turn the power on just long enough to get a reading to verify it is correct. You should get a value 10 to 20% higher than the rated output voltage of 700 VAC. Measure all the other AC voltages (Heater to Rectifier and Tubes V1-V6 to ensure they are within spec of the provided transformer schematics and specs.

If you get a value less than the rating, shut down the amp and check the fuse and wiring to find where the issue is. Typically, there is a wrong connection to ground somewhere. If you get a proper AC value from the HV secondary, power down and install a Rectifier tube.

BE VERY CAREFUL at this point. Your B+ will charge up for this power up.

Hook your Volt Ohm Meter (VOM) set to DC Voltage (600V or greater) and power up again.

1. Very carefully measure from Rectifier V6, Pin 8 to ground. You should have a DC reading of over 500 Volts DC with no other tubes installed.
2. Very carefully measure the voltage to ground at the **Negative** end of the 100uf 160V axial Bias capacitor. You should have an approximate Negative DC reading of -60 Volts DC with no other tubes installed.
3. Very carefully measure the voltage to ground at the **Negative** end of the 22uf 160V axial Bias capacitor. This should vary from approximately -40 VDC to -60 VDC as the Bias Adjustment Pot is turned. If it doesn't, re-check your wiring. This is critical for the fixed bias mode to work properly.

If this is confirmed, power down, remove Rectifier tube knowing the Trip Top DC supply is within spec.

9 Input Jacks

Remove and assemble the input jacks as per layout with the 3.3M resistors and jumpers in place. Then install and wire up the input jacks. Use shielded wire from the input jacks to the tube Grid Resistors and be careful when wiring switched input jacks. It is easiest to remove the jacks, wire them with the resistors and jumpers and then reinstall them. The ground wires on the input jacks go to the pre-amp ground bus wire and to the turret board ground at the input end.

Prepare co-axial cable for connections

1. Cut back the outside plastic covering at both ends by about 5/8" to reveal the braided shield.
2. At one end, pull back the shield and cut it off at the 5/8" mark. Put some heat shrink around the end covering the area where it was cut off.
3. At the other end, pull back the shield but poke a very fine screwdriver or pick into the shield and work out a 'hole'. Fish the inside conductor through this hole and pull it through.
4. Twist the braid together.
5. Finally, cut back the outside plastic covering on the inside conductor at both ends by about 1/4"

Do not connect the shields at both ends of the cable or you will induce hum.

Measure enough shielded cable to reach from the input jacks to the 120K Grid resistors on the terminal strip for V1 and V2, routing the cable around the end of the turret board. Prepare the shielded cable for connection and put some heat shrink over the end to ensure there is no chance the shield will connect to ground or touch the tube pins. Solder the shielded cable Core conductor to each 120K resistor on each tag and the input jack terminal.

10 Final checkout

When you finish assembling the amp, double-check the wiring and the components.

Test continuity for all the connections from turret board to control pot or tube pin. Set your meter to continuity and follow the layout diagram to make sure all the connections are correct. Trace or highlight the connections on a copy of the layout provided with the kit to ensure the amp is wired correctly. Check everything at least once! Touch each component's lead and touch the lead at the other connection.

You can often measure the resistors resistance on the board to confirm they are correct. If they are not, it may be because of the interaction with a capacitor as in bypassed bias circuits.

Measure the resistance from each part that has a ground connection to the chassis. Put your probe on the parts lead. All readings should be between 1 ohm and 0.1 ohm typically.

Make sure the Mains ground at the chassis is **VERY** tight.

Setting the Hum Control Pot

Set the control in mid position as starting point. Once the amp is operating correctly, rotate the control to minimize any hum and use your ears to tweak for lowest hum levels coming from the Trip Top. There should be very little hum.

Power Up

REMEMBER: DO NOT OPERATE YOUR AMP WITHOUT A LOAD SUCH AS A SPEAKER

The following the procedure to follow for the first power up of a new amp. Don't give in into the temptation to "fire it up" as soon as the last solder joint is cold.

Complete all the basic circuit checks already mentioned before soldering the transformers into the rest of the circuit. **If you haven't tested the Power Transformer, go back and do it now.**

Note: If you see or smell smoke when you turn on the amp, turn it off immediately and re-check the connections. It is common for new tubes to emit an odour upon initial start-up.

Install a 3 AMP SLO BLO fuse for 120V operation, 2A for 220-240 VAC Operation
Install the Rectifier tube, V6, 5AR4.

THIS IS IMPORTANT: Before powering up **INSPECT DIODE and FILTER CAPS**. You MUST have the **diodes and cap polarities correct**. This is critical but an easy mistake. If either the diodes or caps are wired in reverse, you can destroy the caps, diodes and possibly the power transformer!

Power on the amp. Flip on Power Switch and watch the following things as quickly as possible and roughly in this order:

- pilot lamp comes on brightly; and
- High AC Voltage secondary goes to nearly the same value as it did with the lines unsoldered

If any of these does not happen, shut off the amp immediately and find the problem by looping back to the beginning of this checklist. If these check out, power down.

KEEP IN MIND that every time you power up from now on that B+ will be high. In all the following steps, B+ MUST be discharged to safely continue messing with the amp guts. The included 220K 2W bleeder resistor will take at least a minute to bring B+ down to safe levels. **Measure the B+ to be sure!**

Now hook your DC voltmeter between B+ terminal on the turret board and ground. Power on the amp, flip on Standby again and check the B+ voltage. With no tubes installed, all the filter caps will charge up to the same voltage. The voltage should be very close to 40% higher than the raw AC. Assuming you measured, say, 700VAC across the full secondary in the above steps, then each half is delivering 360VAC. B+ will be ~40% above this, which is ~500VDC.

Minimizing Hum

Once the amp is operating correctly, turn the Hum Control Pot and use your ears to tune for lowest hum levels coming from the Amp.

Hopefully, there are no problems but if you think there are e.g. hum, squeal etc., then move on to the troubleshooting section of this manual.

Appendix 5 - Cliff Jacks Explained

Here's a Cliff-style jack wired for a single input.

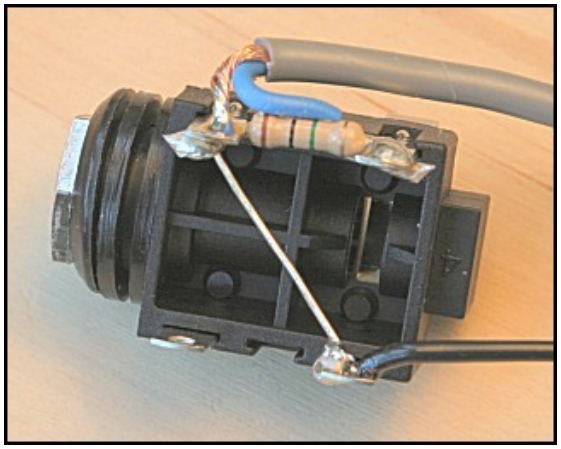

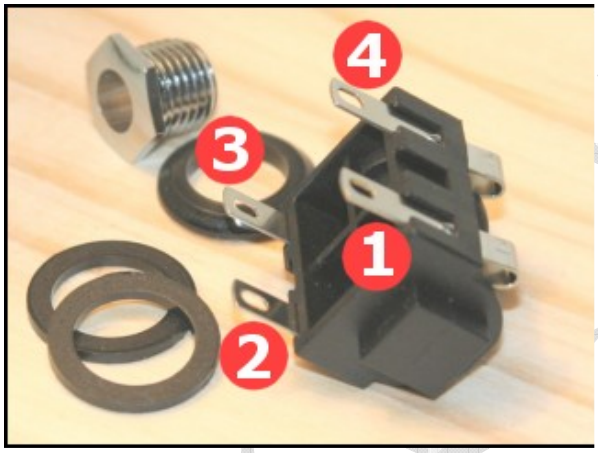

With no guitar plugged in, there's continuity to ground for lugs 2 and 4 (a direct connection) and also for lug 1 (it's not switched and therefore mechanically connected to lug 2 with the crossover wire). With a guitar plugged in, the switching breaks, and now there's only continuity between lugs 2 and 4 and ground. Of course, with a guitar plugged in, you'll read a resistance of 6-12K for lug 1 to ground - depending on your pickups. If your guitar's Volume pot is at zero, you'll find continuity to ground instead.

You should get continuity between the tip and chassis with nothing plugged in because of the shorting jack and the cross over wire. From 18W Forum – loverocker & ebe

Appendix 6- TRIP TOP Bill of Materials

	TRIPTOP BOM			TRIPTOP BOM	
BAG	ITEM	QTY	BAG	ITEM	QTY
MEDIUM	METAL FILM RES 1 OHMS 1%	2	LARGE	FUSE - SLO-BLO,3A	1
	CARBON FILM RESISTORS-220 OHMS 1W	1		SCREW TYPE FUSEHOLDER CSA	1
	WIREWOUND RESISTORS-500OHMS 5% TOL 5W	2		IEC AC CHASSIS JACK CSA/UL	1
	CARBON FILM RESISTORS-510KOHMS 5%	1		BANANA JACK RED	2
	CARBON FILM RESISTORS-1KOHMS 5%	3		BANANA JACK BLACK BU-31602-0	1
	WIREWOUND RESISTORS-1.0KOHMS 10W	1		HEYCO SNAP BUSHING SB 500-4 BLACK	4
	CARBON FILM RESISTORS-2.2KOHMS 0.05	2		TERMINAL STRIP - 3 LUG 2ND LUG COMMON	4
	CARBON FILM RESISTORS-5.6KOHMS 5%	2		POWER INDICATOR NEON 115V	1
	CARBON FILM RESISTORS-10KOHMS 5%	1		1/4 MONO UNSWITCHED JACK #11	2
	CARBON FILM RESISTORS-22KOHMS 5%	3		1/4 MONO SWITCHED JACK #12A	1
	METAL OXIDE RESISTORS 22KOHMS 2W	4		1/4 MONO CLIFFINPUT JACK	3
	CARBON FILM RESISTORS-47K OHMS	2		SHOULDER WASHER 3/8	1
	2W M OXIDE RES 47K OHMS	1		WSHR FBR 3/8".625	1
	CARBON FILM RESISTORS-68KOHMS 5%	1		DPDT 2-POS SLIDE SWITCH Switchcraft 5A/125V	1
	CARBON FILM RESISTORS-120KOHMS 5%	6		SWITCH - CARLING SPST TOGGLE	2
	2W M OXIDE RES 180K OHMS	1		SWITCH - ROTARY 1 POLE 3 POSITION	1
	CARBON FILM RESISTORS-220KOHMS 5% TOL	3	SM	MACHINE SCREW 4-40 THREAD, 5/16" LEN	14
	METAL OXIDE RESISTORS 220KOHMS 5% TOL	3		MACHINE SCREW NUT W/TOOTH WASHER 4-40	3
	CARBON FILM RESISTORS-270KOHMS 5%	6	SMALL	MACHINE SCREW 6-32 THREAD, 3/8" LENG	4
	CARBON FILM RESISTORS-470KOHMS 5%	5		MACHINE SCREW NUT W/TOOTH WASHER 6-32	4
	CARBON FILM RESISTORS-3.3MOHMS 5%	2		MACHINE SCREW 6-32 THREAD, 1" LENGTH	4
MEDIUM	CAP SILVER MICA 500 PF @ 500V	4		LUGLOCKING MATTE TINNED#6	4
	FILM CAP 630V .001µF 10%	2		LOCK WASHER INTERNAL #6	4
	FILM CAP 630V .0047µF 5%	2		STANDOFFS & SPACERS .500 STD SPACER	4
	FILM CAP 630V .01µF 5%	2	SMALL	MACHINE SCREW 8-32 THREAD, 3/8" LENG	9
	DISC CAP 1000V .01µF 5%	1		MACHINE SCREW HEX NUT 8-32 SCREW	9
	FILM CAP 630V .022µF 5%	5		LUG LOCKING MATTE TINNED #8	1
	FILM CAP 630V .047µF 5%	2	MED	10-32 1-1/2 IN ZINC SCREW	4
	CAP 25µF 50 V AXIAL ELECTRO	1		10-32 CAGE NUT	4
	CAP 47µF 63V AXIAL ELECTRO	4	LARGE	18 GA BLACK / 18 GA WHITE STRANDED IN.	18
	CAP 50µF 450V AXIAL ELECTRO	3		22 GA. SOLID CORE WIRE FT (COLOURS)	16
	DIODE µF4007 FAST 1000V 1A DO-41	1		20 GA. SOLID CORE TWISTED WIRE PAIR FT	3
MED	CAP - ELECTROLYTIC 50/50 µF @ 500 VDC	1		BELDEN RG-174 PE BRD PVC, BLK FT.	16
	CLAMP FOR CAP 1-3/8 DIAMETER	1		1/16 INCH HEAT-SHRINK TUBING (IN)	4
MED	POT BIAS 10K LINEAR -	1		1/8 INCH HEAT-SHRINK TUBING (IN)	8
	POT ALPHA 1 MEG AUDIO 3/8 BUSHING	4		1/4 INCH HEAT-SHRINK TUBING (IN)	4
	POT - ALPHA 1M AUDIO WITH SWITCH	2		CABLE TIE 4 IN BLACK	14
	200 OHM LINEAR POT SCRWDVR SLOT	1		TRIPTOP GP03 TURRET BOARD	1
LARGE	SOCKET 8 PIN OCTAL MICALEX MIP	6		CONTROL COPPER BUS WIRE IN	12
	KNOB SKIRTED PONTER WHITE LINE	6		FOAM STRIP IN	6
	KNOB - CHICKEN HEAD, HIGH QUALITY, BL	1		TRIPTOP TONE BOARD	2
	HEYBOER B15 PLUS 300 mA, POWER TRANS	1		CORD, POWER, 3 CONDUCTOR, IEC 8', 18 GA	1
	HEYBOER B15 PLUS OUTPUT TRANS	1		TRIPTOP STAINLESS CHASSIS .062 IN	1
				TRIPTOP BUILDERS GUIDE	1