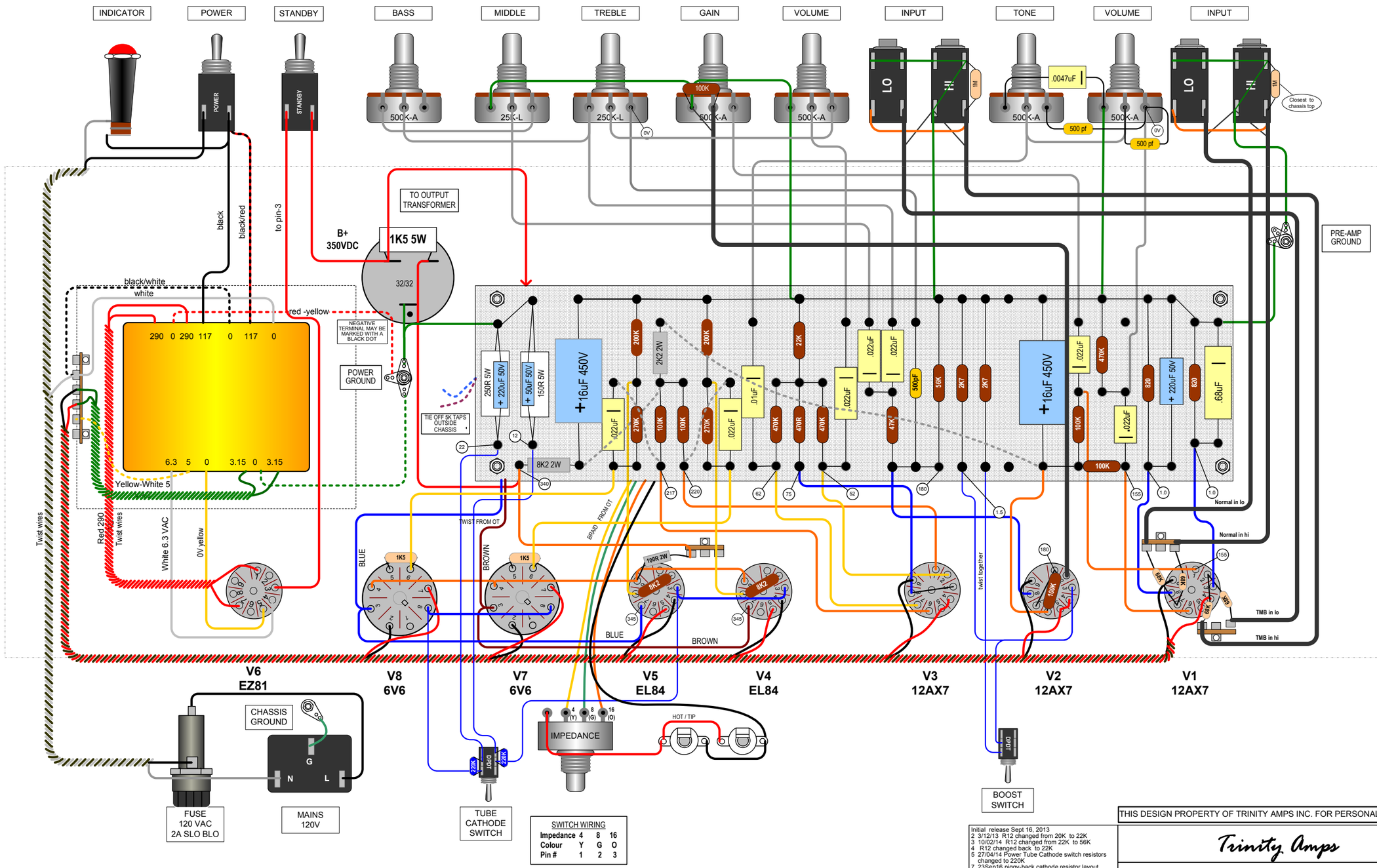

SWITCH WIRING

Impedance	4	8	16
Colour	Y	G	O
Pin #	1	2	3

Mounting Hardware

#4 screws – tubes, terminal strip, pre amp ground, IEC Mains connector
#6 screws – power ground, stand-offs
#8 screw – Chassis ground with lock washers, transformer

Wire

22 ga solid – alternating colours from board to tube; board to controls
22 ga twisted – heater supply
18 ga stranded – power supply

Initial release Sept 16, 2013
2 3/12/13 R12 changed from 20K to 22K
3 10/02/14 R12 changed from 22K to 56K
4 R12 changed back to 22K
5 27/04/14 Power Tube Cathode switch resistors changed to 220K
7 23Sep16 piggy-back cathode resistor layout

THIS DESIGN PROPERTY OF TRINITY AMPS INC. FOR PERSONAL USE ONLY

Trinity Amps

v6 Plexi - Dual Power Tube with Boost

SIZE	FSCM NO	DWG NO	REV
			7

SCALE Not To Scale